Annequin

AnoFrame™ with Off-the-Wall Brackets

Instruction Sheet

A

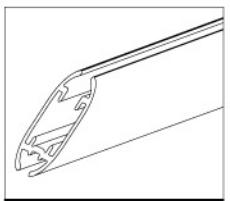

3
Full Rails

B

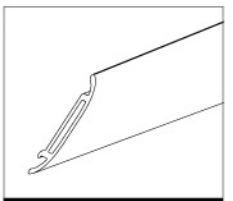

2
Split Rails

C

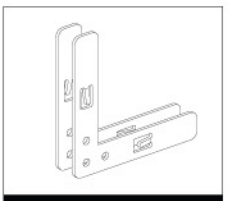

4 Pairs
Brackets

D

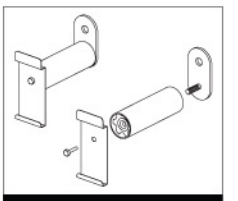

4
Off-the-Wall

E

4
Hardware Kits

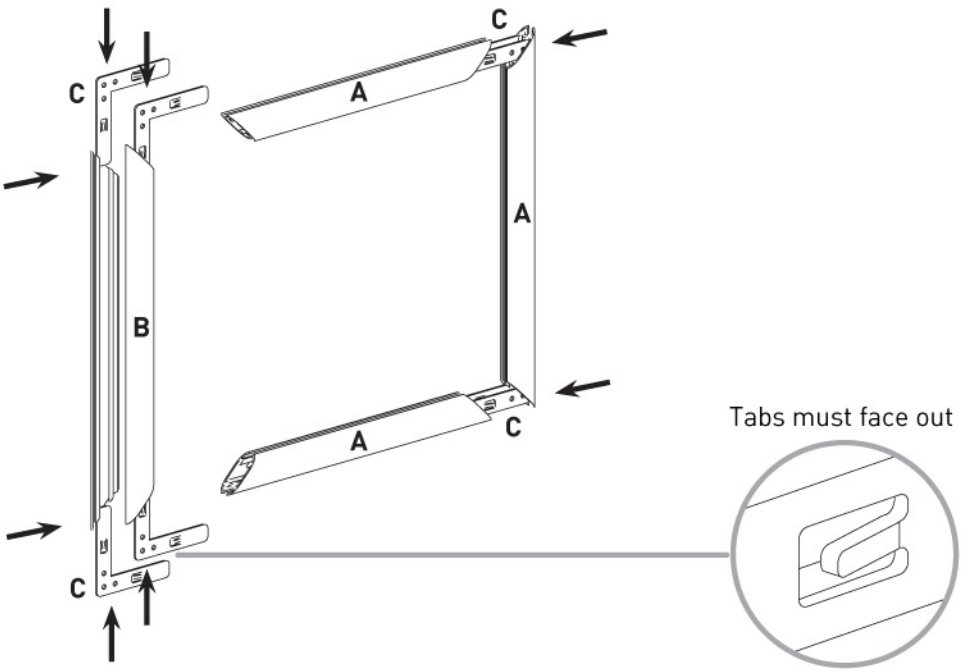

Measure and level Off-the-Wall Brackets then screw into wall at frame corners.

Use 1 inch wood screw for wood and other solid surfaces. Use 3 inch toggle anchor for drywall and other hollow surfaces; predrilling 3/8" hole is necessary.

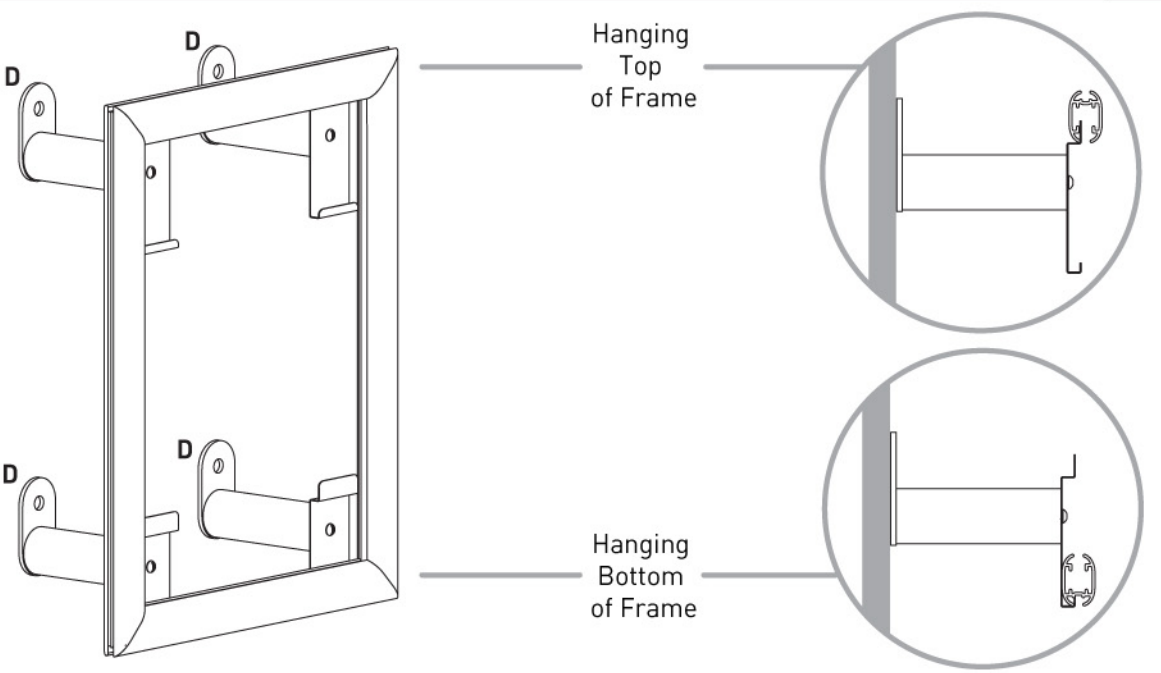

• info@annequin.co.uk • t: 0845 450 2128 • f: 0845 450 2129

Annequin
Signware Solutions